PRECAST SINGLE SLOPE CONCRETE BARRIER

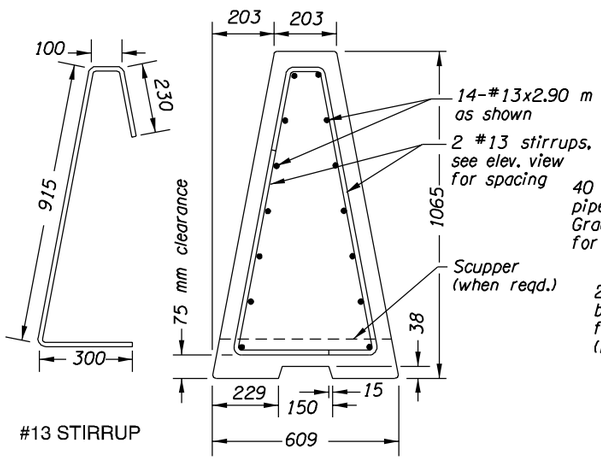

TYPICAL SECTION

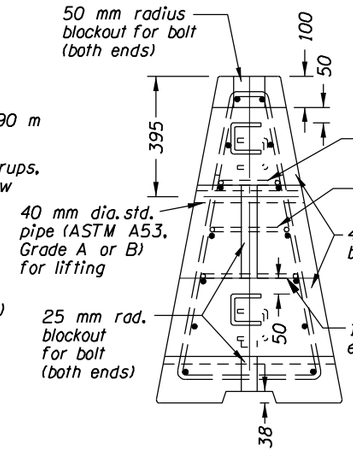

END VIEW A-A

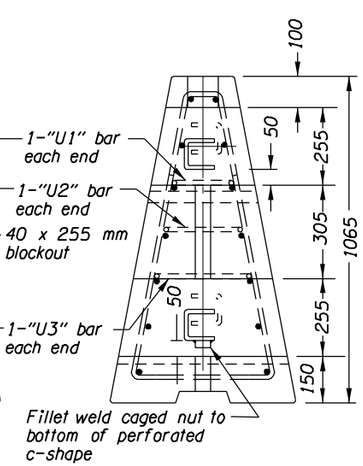

END VIEW B-B

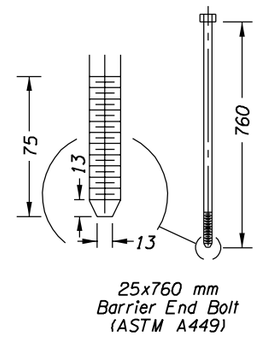

BOLT DETAILS

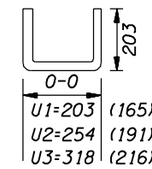

U-BAR DETAIL

* Vertical back barrier #13 bar

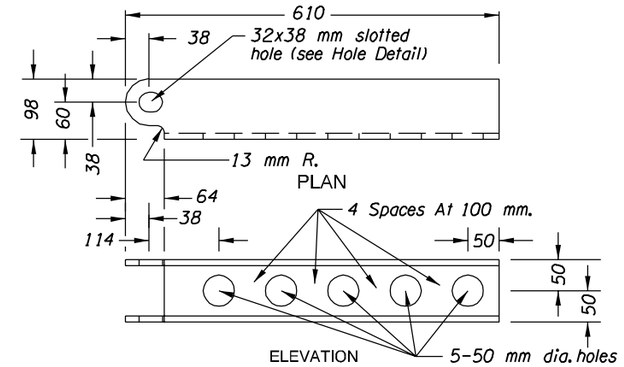

PERFORATED C-SHAPE

Cut from 7.9 mm thick steel plate or bar (AASHTO M183M, ASTM A36M). Hot dip galv. after fabrication. (See note 5 for casting instructions.)

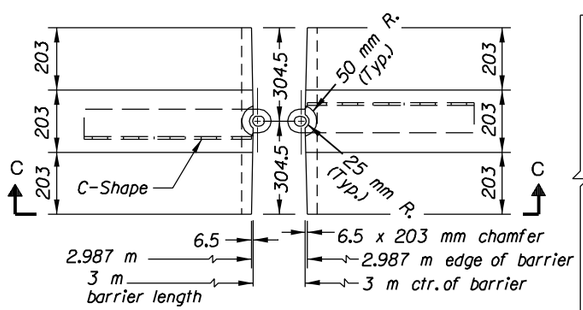

PLAN

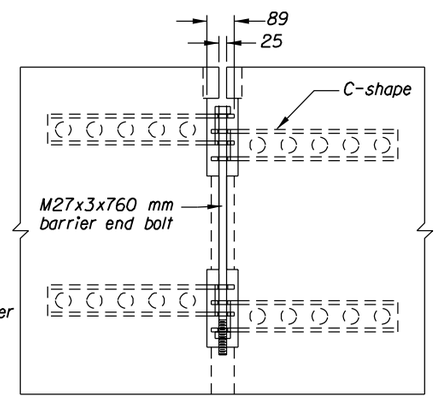

SECTION C-C

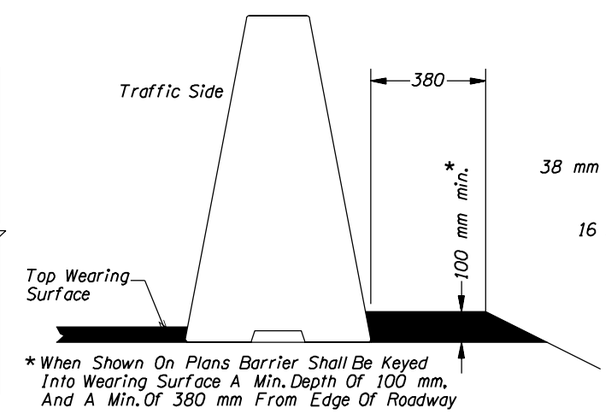

* When Shown On Plans Barrier Shall Be Keyed Into Wearing Surface A Min. Depth Of 100 mm. And A Min. Of 380 mm From Edge Of Roadway

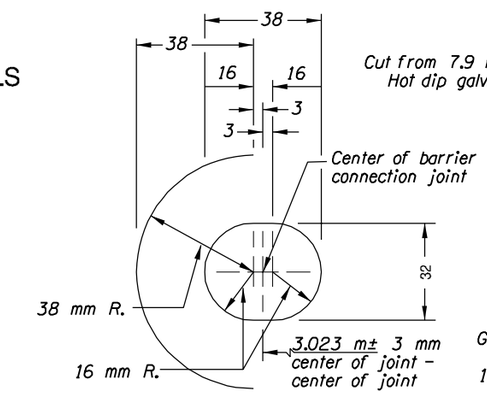

HOLE DETAIL

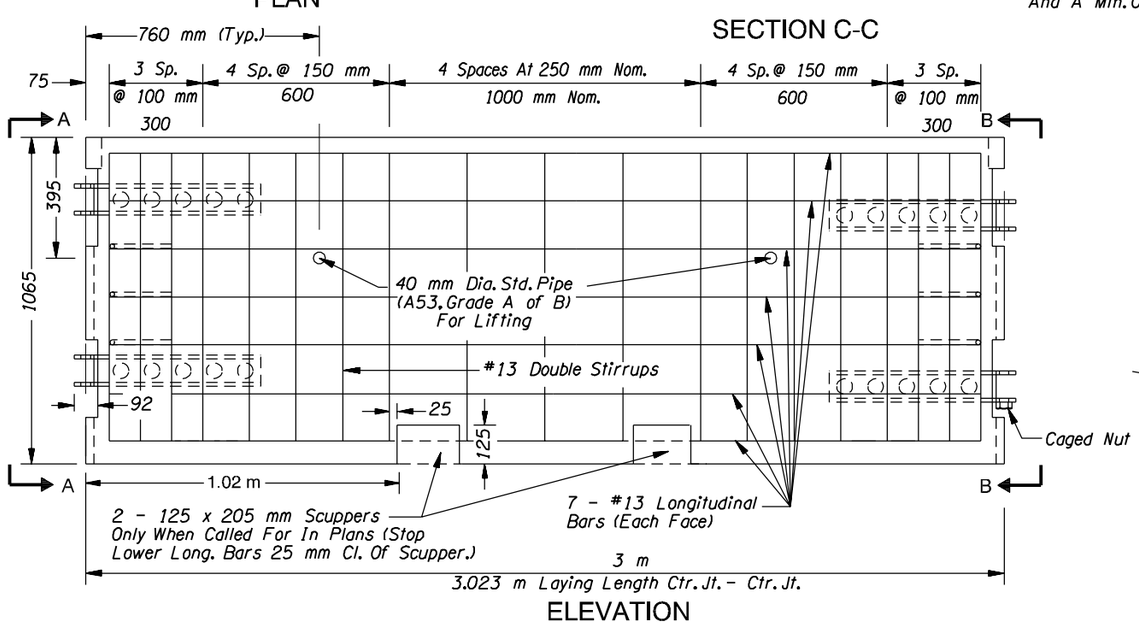

ELEVATION

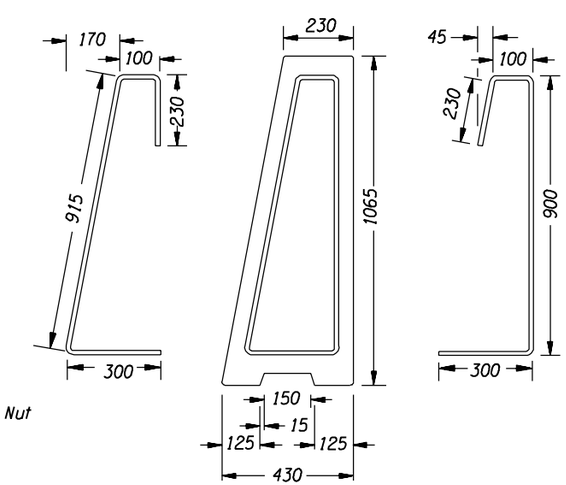

NARROW BASE BARRIER

Only Use Against Retaining Walls Or As Directed. (for Details Not Shown See Other Barrier Details On This Sheet.)

General Notes

1. All Reinforcing Steel Shall Conform To ASTM A706M Or AASHTO M31M (ASTM A615M) Grade 420. All Bars Shall Be Full Length As Shown And Shall Be Placed 40 mm Clear Of The Nearest Face Of Conc. Unless Shown Otherwise.
2. All Structural Steel Including Fasteners Shall Be Hot-dip Galvanized After Fabrication.
3. Norm. Use Of Precast Single Slope Median Barrier Is Restricted To Curves With Radii Greater Than 250 m.
4. Chamfer All Edges 20 mm (typical).
5. Perforated C-shape Shall Be Placed In Location Shown To A Tolerance Of 2 mm.
6. Estimated Barrier Weight Is 3130 Kg Per 3 m Unit Length. Estimated Vertical Backed Barrier Weight Is 2500 Kg.

- All dimensions are in mm unless otherwise noted.

OREGON DEPARTMENT OF TRANSPORTATION

SHEET NO.

ne7360ab/usr/mdet/detail144.dgn 8-15-02

DET144