CAST IN PLACE CONCRETE BARRIER
TRANSITION TO PARAPET RAIL

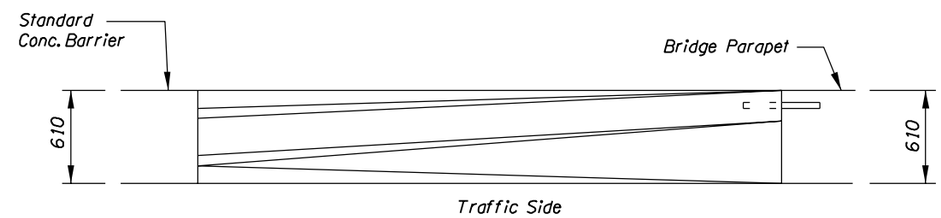

PLAN

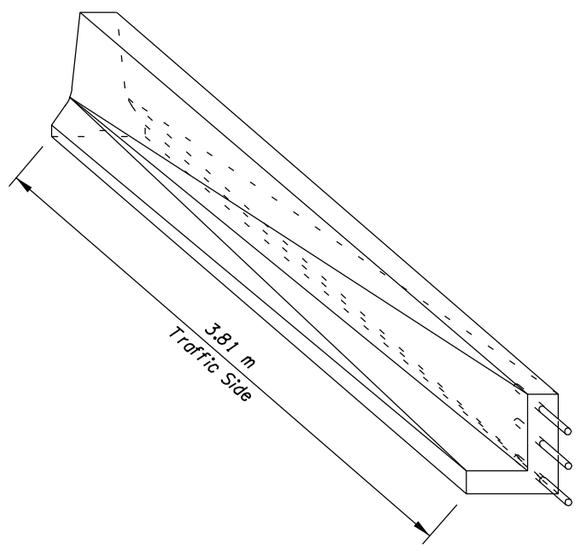

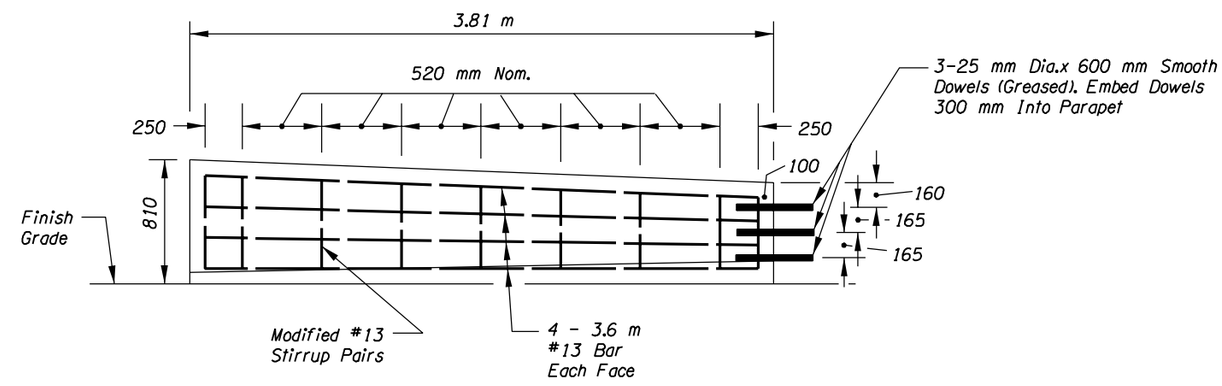

ELEVATION

All Reinforcement To Be 50 mm Clear Of
Face Of Concrete Unless Otherwise Shown

OREGON DEPARTMENT OF TRANSPORTATION

SHEET NO.

ne7360ab/usr/mdet/detail130.dgn 3-24-00

DET 130